Model	Pipe size, (in)	Dimensions in Inches, (in)					Ship. Weight (lbs)
		A	B	C	D	E	
PS-2-250	2	3.25	3.63	5.00	0.75	0.50	14
PS-3-250	3	4.50	5.00	6.63	0.88	1.06	14

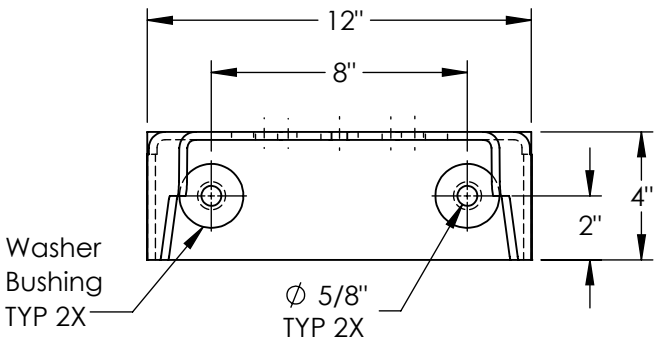

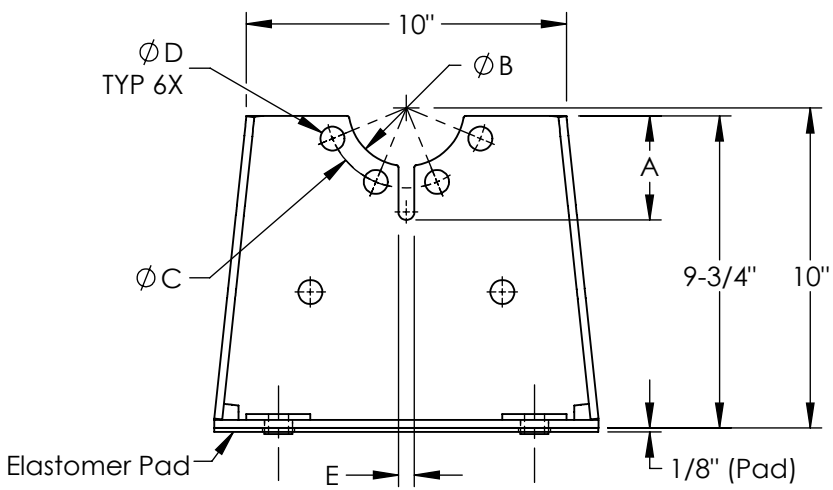

Notes:

1. Bolt holes and cutouts are sized to match ANSI 250 and ANSI 300 flange dimensions.
2. Elastomer Pad reduces minor vibration while Bridge-Bearing Neoprene Washer Bushings prevent metal to metal contact.
3. Pump Stands are made from rugged steel and painted for corrosion protection.
4. DPS consists of two PS Pump Stands bolted together; thus, the structural rigidity is increased.
5. Pump Stands must be installed in pairs for in-line pumps (see installation instructions).

PS - models

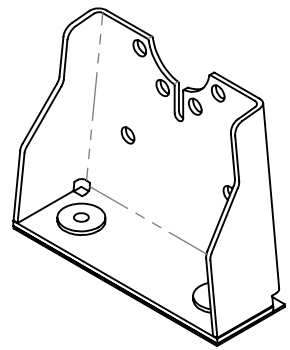

DPS - models

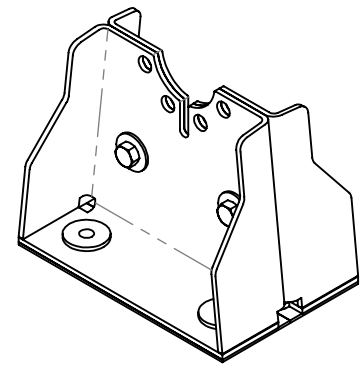

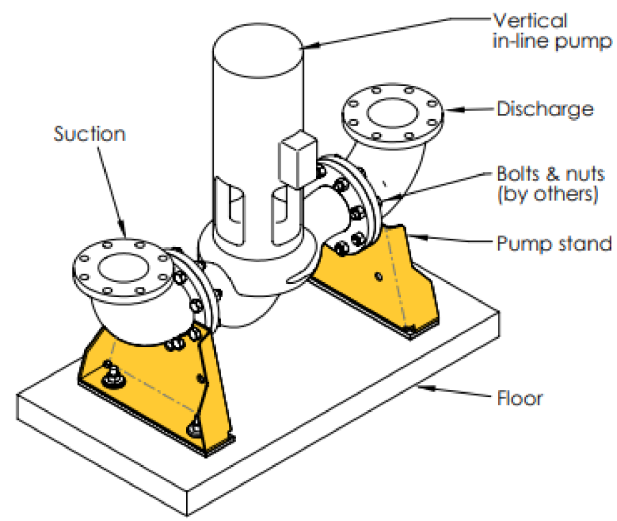

	NAME	DATE
DRAWN	R.D.	2025-01-31
APPR.	--	--
QUANTITY		01

UNLESS OTHERWISE SPECIFIED:
3RD ANGLE PROJECTION
DIMENSIONS ARE IN INCHES
TOLERANCES:
ANGULAR ± 1°
FRACTIONAL ± .025
TWO PLACE DECIMAL ± .010
THREE PLACE DECIMAL ± .006

MODEL: PS & DPS

VibraSystems Inc
www.vibrasystems.com

PART:
Submittal - Pump Stand
2" to 3" Pipe Size - Class 250

SIZE	DWG. NO.	REV
A	156-100-00-A	A

SCALE: 1:6 | DO NOT SCALE DRAWING | SHEET 1 OF 1